Work Order ID 62337

Monday, September 27, 2010 11:31:23 AM

Item ID: D3572-041 **Accept** **Setup Start**

Revision ID: **Stop**

Item Name: Guide Assembly

Start Date: 9/27/2010 **Start Qty:** 8.00 **Cust Item ID:**

Required Date: 10/4/2010 **Req'd Qty:** 8.00 **Customer:**

Reference:

Approvals: **Process Plan:** H **Date:** 10-9-27 **Tooling:** _____ **Date:** _____ **Run Start**

QC: _____ **Date:** _____ **SPC (Y/N):** _____ **Date:** _____ **Stop**

Sequence ID/ Work Center ID	Operation Description	Set Up/ Run Hours	Tool ID	Tool #	Plan Code	Accept Qty	Reject Qty	Reject Number	Insp. Stamp
Draw Nbr	**Revision Nbr**								
D3572	Rev D								
100	Pick Kit	0.00				8X			
Packaging	**Memo**	0.00							
Packaging									
110	Small Fab	0.00				8X			
Small Fab	**Memo**	0.00							
Small Fab	1-Cut Tube D3572-1 as per Dwg D3572 2-deburr both ends								
120	QC5- Inspect part completeness to step on W/O	0.00				x8			
QC	**Memo**	0.00							
Quality Control									

=7m.t w/oa/29

m.t w/oa/29

Solo 9/29

Dart Aerospace Ltd

W/O:		WORK ORDER CHANGES					
DATE	STEP	PROCEDURE CHANGE	By	Date	Qty	Approval Chief Eng / Prod Mgr	Approval QC Inspector

Part No: _____ PAR #: _____ Fault Category: _____ NCR: Yes No DQA: _____ Date: _____

Resolution: _____ Disposition: _____ QA: N/C Closed: _____ Date: _____

NCR:		WORK ORDER NON-CONFORMANCE (NCR)						
DATE	STEP	Description of NC Section A	Corrective Action Section B			Verification Section C	Approval Chief Eng	Approval QC Inspector
			Initial Chief Eng	Action Description Chief Eng	Sign & Date			

NOTE: Date & initial all entries

H:\fFORMS\Quality Assurance\approved QA\NCRWO RevE

Work Order ID 62337

Monday, September 27, 2010 11:31:23 AM

Item ID: D3572-041 **Accept** **Setup Start**

Revision ID:

Item Name: Guide Assembly **Stop**

Start Date: 9/27/2010 **Start Qty:** 8.00 **Cust Item ID:**

Required Date: 10/4/2010 **Req'd Qty:** 8.00 **Customer:**

Reference:

Approvals: **Process Plan:** _____ **Date:** _____ **Tooling:** _____ **Date:** _____ **Run Start**

QC: _____ **Date:** _____ **SPC (Y/N):** _____ **Date:** _____ **Stop**

Sequence ID/ Work Center ID	Operation Description	Set Up/ Run Hours	Tool ID	Tool #	Plan Code	Accept Qty	Reject Qty	Reject Number	Insp. Stamp
130	Weld per dwg A/R Aluminum rod Batch: AA 108436	0.00							
Large Fab	Large Fab								
Large Fab	**Memo**	0.00				2	10-11-25		x8
	1-Weld D3572-3 guides and D3572-5 bracket as per Dwg D3572 2- grind weld flush at the end of tube only								
140	QC5- Inspect part completeness to step on W/O	0.00							
QC		Solubs							
Quality Control	**Memo**	0.00				x8			
150	QC9- Inspect visual per QSI004- Fusion Welds	0.00							
QC						x8	~~10~~	0	BE 10/11/25
Quality Control	**Memo**	0.00							

Dart Aerospace Ltd

W/O:		WORK ORDER CHANGES					
DATE	STEP	PROCEDURE CHANGE	By	Date	Qty	Approval Chief Eng / Prod Mgr	Approval QC Inspector

Part No: _____ PAR #: _____ Fault Category: _____ NCR: Yes No DQA: _____ Date: _____

Resolution: _____ Disposition: _____ QA: N/C Closed: _____ Date: _____

NCR:		WORK ORDER NON-CONFORMANCE (NCR)						
DATE	STEP	Description of NC Section A	Corrective Action Section B			Verification Section C	Approval Chief Eng	Approval QC Inspector
			Initial Chief Eng	Action Description Chief Eng	Sign & Date			

NOTE: Date & initial all entries

H:\fFORMS\Quality Assurance\approved QA\NCRWO RevE

Work Order ID 62337

Monday, September 27, 2010 11:31:23 AM

Item ID: D3572-041 **Accept** **Setup Start**

Revision ID: **Stop**

Item Name: Guide Assembly

Start Date: 9/27/2010 **Start Qty:** 8.00 **Cust Item ID:**

Required Date: 10/4/2010 **Req'd Qty:** 8.00 **Customer:**

Reference:

Approvals: **Process Plan:** _____ **Date:** _____ **Tooling:** _____ **Date:** _____ **Run Start**

QC: _____ **Date:** _____ **SPC (Y/N):** _____ **Date:** _____ **Stop**

Sequence ID/ Work Center ID	Operation Description	Set Up/ Run Hours	Tool ID	Tool #	Plan Code	Accept Qty	Reject Qty	Reject Number	Insp. Stamp
180 HandFinish Hand Finishing	Chemical Conversion Coat per QSI005 4.1 **Memo**	0.00 0.00	=> M	10/11/26		8	Ø		
190 Powdercoat Powder Coating	Grey Sandtex(Ref:4.3.5.6) per QSI005 4.3 M 112588 **Memo** START TIME: 10:15 OVEN TEMPERATURE: 320° FINISH TIME: 10:45	0.00 0.00				8	BL 10-11-26.		
200 QC Quality Control	QC3- Inspect Part Finish **Memo**	0.00 0.00	=> M	10/11/29		8	Ø		

Dart Aerospace Ltd

W/O:		WORK ORDER CHANGES					
DATE	STEP	PROCEDURE CHANGE	By	Date	Qty	Approval Chief Eng / Prod Mgr	Approval QC Inspector

Part No: _____ **PAR #:** _____ **Fault Category:** _____ **NCR:** Yes No **DQA:** _____ **Date:** _____

Resolution: _____ **Disposition:** _____ **QA: N/C Closed:** _____ **Date:** _____

NCR:		WORK ORDER NON-CONFORMANCE (NCR)						
DATE	STEP	Description of NC Section A	Corrective Action Section B			Verification Section C	Approval Chief Eng	Approval QC Inspector
			Initial Chief Eng	Action Description Chief Eng	Sign & Date			

NOTE: Date & initial all entries

H:\fFORMS\Quality Assurance\approved QA\NCRWO RevE

Work Order ID 62337

Monday, September 27, 2010 11:31:23 AM

Item ID: D3572-041 **Accept** **Setup Start**

Revision ID: **Stop**

Item Name: Guide Assembly

Start Date: 9/27/2010 **Start Qty:** 8.00 **Cust Item ID:**

Required Date: 10/4/2010 **Req'd Qty:** 8.00 **Customer:**

Reference:

Approvals: **Process Plan:** _____ **Date:** _____ **Tooling:** _____ **Date:** _____ **Run Start**

QC: _____ **Date:** _____ **SPC (Y/N):** _____ **Date:** _____ **Stop**

Sequence ID/ Work Center ID	Operation Description	Set Up/ Run Hours	Tool ID	Tool #	Plan Code	Accept Qty	Reject Qty	Reject Number	Insp. Stamp
210	Identify as per dwg & Stock Location: 260	0.00							
Packaging	Memo	0.00				10/11/29		(8x)	
Packaging									
220	QC21- Final Inspection - Work Order Release	0.00							
QC	Memo	0.00				CK 10/11/29			
Quality Control									

MF
10-11-29

Dart Aerospace Ltd

W/O:		WORK ORDER CHANGES					
DATE	STEP	PROCEDURE CHANGE	By	Date	Qty	Approval Chief Eng / Prod Mgr	Approval QC Inspector

Part No: _____ **PAR #:** _____ **Fault Category:** _____ **NCR:** Yes No **DQA:** _____ **Date:** _____

Resolution: _____ **Disposition:** _____ **QA: N/C Closed:** _____ **Date:** _____

NCR:		WORK ORDER NON-CONFORMANCE (NCR)						
DATE	STEP	Description of NC Section A	Corrective Action Section B			Verification Section C	Approval Chief Eng	Approval QC Inspector
			Initial Chief Eng	Action Description Chief Eng	Sign & Date			

NOTE: Date & initial all entries

H:\fFORMS\Quality Assurance\approved QA\NCRWO RevE

Picklist Print

Monday, September 27, 2010 11:31:27 AM

Work Order ID: 62337

Parent Item: D3572-041

Parent Item Name: Guide Assembly

Start Date: 9/27/2010 **Required Date:** 10/4/2010

Start Qty: 8.00 **Required Qty:** 8.00

Comments:
IPP Rev:A New Issue 07-02-07 JLM
IPP rev B revB dwg EC
IPP Rev:C Removed D3572-7 Cap 07-06-11 JLM
IPP Rev:D 08-05-27 Review process of IPP DD verified by:EC

Component Item ID/ Item Name	Replacement Item ID	Mfg/ Purch	Bin Item	Primary Location	Last Location	Route Seq ID	Unit of Measure	Qty on Hand	Qty per Kit	Total Qty	Qty Issued	Date Issued	Status
M6061T6T1.000W.188		Purchased	No			110	f	63.5653	2.34	19.70526			
6061T6 RD TUBE 1.00 X .188W													
				Location			**Loc Qty**		**Loc Code**				
				MAT			1.2163						
					114520		1.2163						
				MAT016			62.349						
					113511		15.516						
					114089		46.833						
D3572-3		Manufactured	No			130	Each	20.0000	4	32			
Guide													
				Location			**Loc Qty**		**Loc Code**				
				ST244			20						
					59640		20						
D3572-5		Manufactured	No			130	Each	25.0000	1	8			
Bracket													
				Location			**Loc Qty**		**Loc Code**				
				ST072			20						
					59405		20						
				WA			5						
					54119		5						

62215x2
62401x30

19.70526

EC 10-11-23

EC 10-11-23

59

Dart Aerospace Ltd

W/O:		WORK ORDER CHANGES					
DATE	STEP	PROCEDURE CHANGE	By	Date	Qty	Approval Chief Eng / Prod Mgr	Approval QC Inspector

Part No: _____ PAR #: _____ Fault Category: _____ NCR: Yes No DQA: _____ Date: _____

Resolution: _____ Disposition: _____ QA: N/C Closed: _____ Date: _____

NCR:		WORK ORDER NON-CONFORMANCE (NCR)						
DATE	STEP	Description of NC Section A	Corrective Action Section B			Verification Section C	Approval Chief Eng	Approval QC Inspector
			Initial Chief Eng	Action Description Chief Eng	Sign & Date			

NOTE: Date & initial all entries

H:\fFORMS\Quality Assurance\approved QA\NCRWO RevE

ITEM No.	QTY -041	QTY -043	QTY -044	PART NUMBER	DESCRIPTION
1	X			D3572-041	GUIDE ASSEMBLY
2		X		D3572-043	GUIDE ASSEMBLY (UH-1)
3			X	D3572-044	GUIDE ASSEMBLY (UH-1) (OPP)
11	1	1	1	D3572-1	TUBE
12	4	4	4	D3572-3	GUIDE
13	1	3	3	D3572-5	BRACKET
14	-	-	-	D3572-7	DELETED AT REV C

SHOP COPY
RETURN TO
ENGINEERING
UNCONTROLLED COPY
SUBJECT TO AMENDMENT
WITHOUT NOTICE
WORK ORDER
NO. 42337
PS 10-9-07

RELEASED
09-04-28

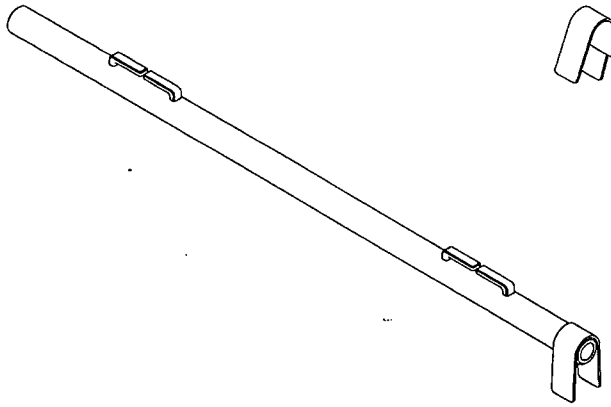

D3572-041 GUIDE ASSEMBLY

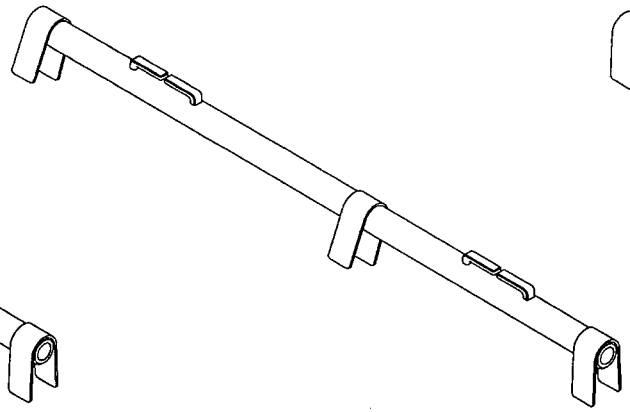

D3572-043 GUIDE ASSEMBLY (UH-1)

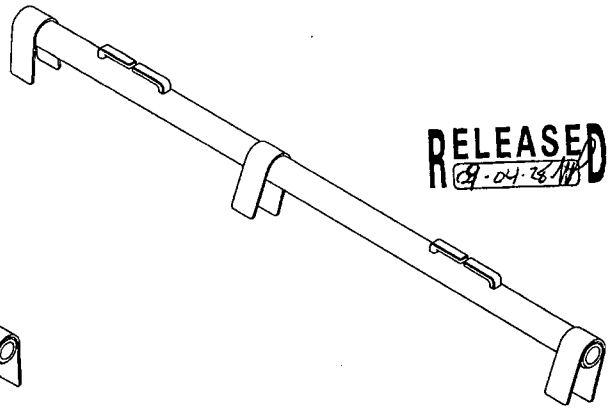

D3572-044 GUIDE ASSEMBLY (UH-1)

NOTES:
1) MATERIAL: NONE
2) FINISH: CHEMICAL CONVERSION COAT PER DART QSI 005 4.1
POWDER COAT GREY SANDTEX (4.3.5.6) PER DART QSI 005 4.3
3) TOLERANCES: PER DART QSI 018 UNLESS OTHERWISE NOTED
4) UNITS: INCHES UNLESS OTHERWISE NOTED
5) BREAK SHARP EDGES: 0.005 TO 0.010 MAX
6) IDENTIFICATION: IDENTIFY WITH DART P/N "D3572-XXX" USING FINE POINT PERMANENT INK MARKER
7) WEIGHT -041: 1.34 lbs
-043/-044: 1.42 lbs
8) WELDING: PER DART QSI 004

REV.	DESCRIPTION	BY	DATE
D	REDRAWN IN "B" SIZE FORMAT TO CURRENT STANDARDS. ADD -043, -044 FOR UH-1. SEE PAR 09-017.	AJS	09.04.17
C	REMOVE D3572-7	LE	07.06.01
B	FOR D3573-3 0.03 CHMF WAS 0.06; ADD TYP TO FILLET	LE	07.04.20
A	NEW ISSUE	LE	07.03.29

DESIGN	LE	DART AEROSPACE LTD HAWKESBURY, ONTARIO, CANADA	
DRAWN	AJS		
CHECKED		DRAWING NO. D3572	REV. D SHEET 1 OF 4
MFG. APPR.			
APPROVED		TITLE GUIDE ASSEMBLY	SCALE NTS
DE APPR.			
DATE	09.04.17		

Dart Aerospace Ltd

W/O:		WORK ORDER CHANGES					
DATE	STEP	PROCEDURE CHANGE	By	Date	Qty	Approval Chief Eng / Prod Mgr	Approval QC Inspector

Part No: _____ **PAR #:** _____ **Fault Category:** _____ **NCR:** Yes No **DQA:** _____ **Date:** _____

Resolution: _____ **Disposition:** _____ **QA: N/C Closed:** _____ **Date:** _____

NCR:		WORK ORDER NON-CONFORMANCE (NCR)						
DATE	STEP	Description of NC Section A	Corrective Action Section B			Verification Section C	Approval Chief Eng	Approval QC Inspector
			Initial Chief Eng	Action Description Chief Eng	Sign & Date			

NOTE: Date & initial all entries

wlo 42337

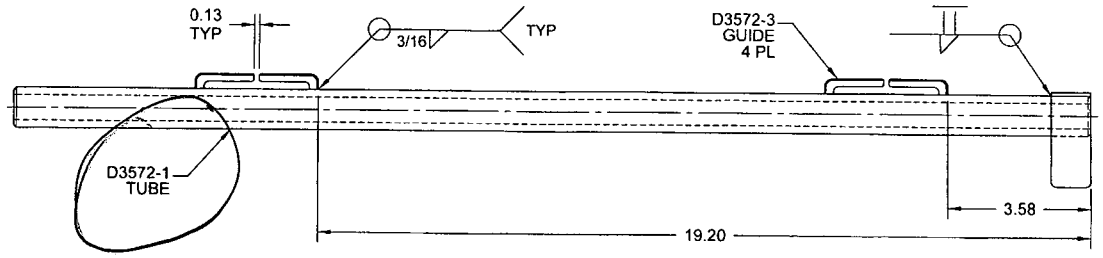

D3572-041 GUIDE ASSEMBLY

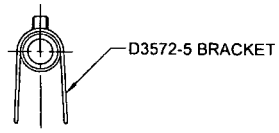

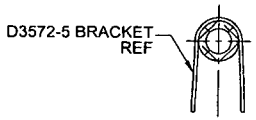

SECTION B-B C2-2

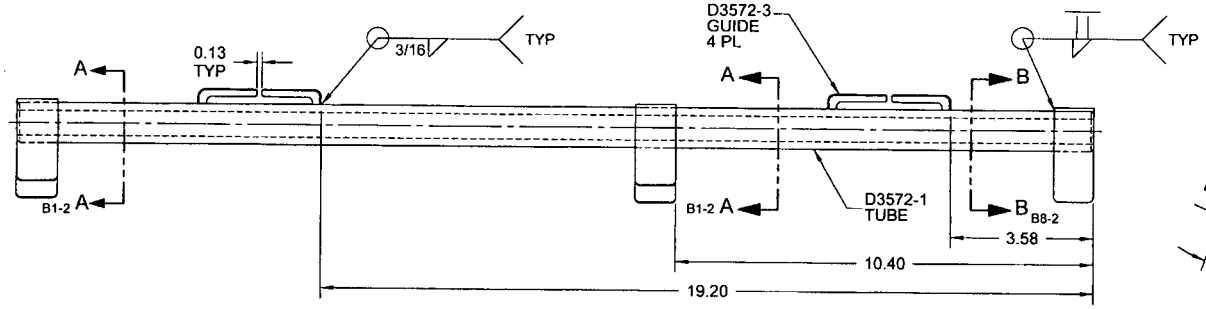

D3572-043 GUIDE ASSEMBLY

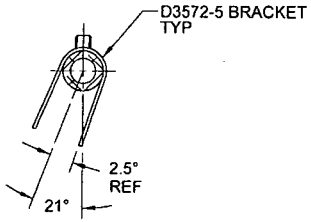

SECTION A-A C7-2 C4-2
(2 PL)

RELEASED
09.04.18

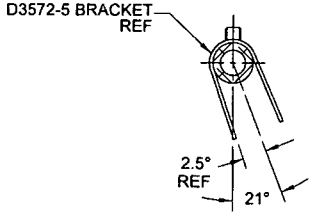

SECTION C-C A2-2 A5-2

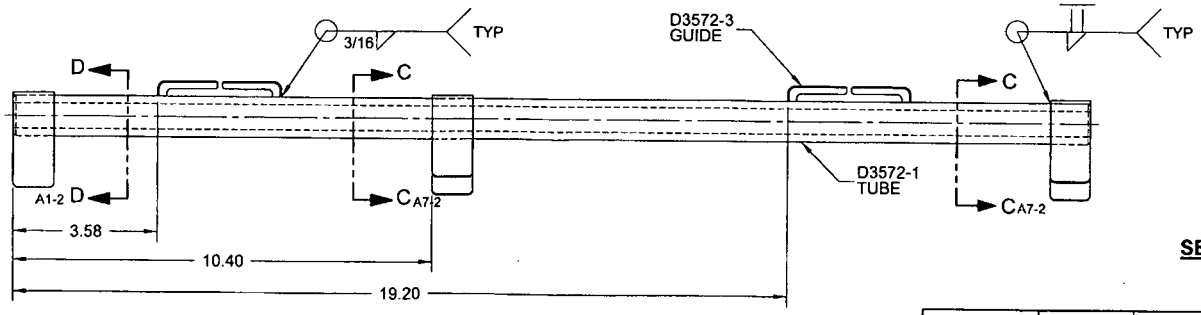

D3572-044 GUIDE ASSEMBLY

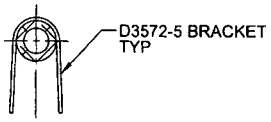

SECTION D-D A7-2

DESIGN	LE	**DART AEROSPACE LTD** HAWKESBURY, ONTARIO, CANADA
DRAWN	AJS	
CHECKED		DRAWING NO. D3572 — REV. D — SHEET 2 OF 4
MFG. APPR.		
APPROVED		TITLE: GUIDE ASSEMBLY — SCALE: NTS
DE APPR.		
DATE	09.04.17	

Dart Aerospace Ltd

W/O:		WORK ORDER CHANGES					
DATE	STEP	PROCEDURE CHANGE	By	Date	Qty	Approval Chief Eng / Prod Mgr	Approval QC Inspector

Part No: _____ **PAR #:** _____ **Fault Category:** _____ **NCR:** Yes No **DQA:** _____ **Date:** _____

Resolution: _____ **Disposition:** _____ **QA: N/C Closed:** _____ **Date:** _____

NCR:		WORK ORDER NON-CONFORMANCE (NCR)						
DATE	STEP	Description of NC Section A	Corrective Action Section B			Verification Section C	Approval Chief Eng	Approval QC Inspector
			Initial Chief Eng	Action Description Chief Eng	Sign & Date			

NOTE: Date & initial all entries

H:\fFORMS\Quality Assurance\approved QA\NCRWO RevE

w/o 62337

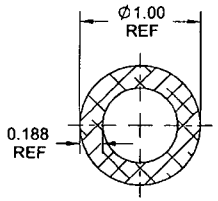

SECTION E-E C5-3

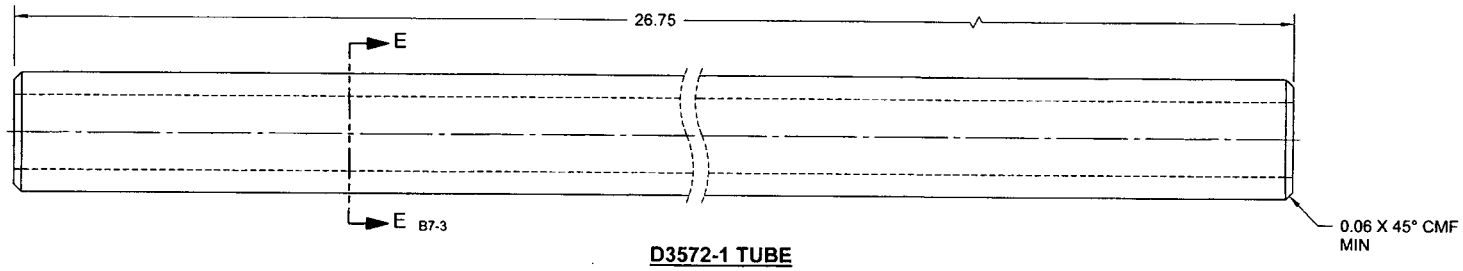

D3572-1 TUBE

RELEASED
09/04/18

D3572-1 NOTES:
1) MATERIAL: 6061-T6 (T62) ALUMINUM TUBE 1.00 OD X 0.188 WALL
PER WW-T-700/6 OR AMS 4080 OR AMS 4082 OR AMS-QQ-A-200/8 OR AMS-QQ-A-225/8
REF DART SPEC M6061T61.000W.188
2) FINISH: N/A
3) TOLERANCES: PER DART QSI 018 UNLESS OTHERWISE NOTED
4) UNITS: INCHES UNLESS OTHERWISE NOTED
5) BREAK SHARP EDGES: 0.005 TO 0.010 MAX
6) IDENTIFICATION: N/A
7) WEIGHT: 1.25 lbs

DESIGN	LE	**DART AEROSPACE LTD** HAWKESBURY, ONTARIO, CANADA
DRAWN	AJS	
CHECKED		DRAWING NO. D3572 — REV. D — SHEET 3 OF 4
MFG. APPR.		
APPROVED		TITLE GUIDE ASSEMBLY — SCALE NTS
DE APPR.		
DATE	09.04.17	

Dart Aerospace Ltd

W/O:		WORK ORDER CHANGES					
DATE	STEP	PROCEDURE CHANGE	By	Date	Qty	Approval Chief Eng / Prod Mgr	Approval QC Inspector

Part No: _____ **PAR #:** _____ **Fault Category:** _____ **NCR:** Yes No **DQA:** _____ **Date:** _____

Resolution: _____ **Disposition:** _____ **QA: N/C Closed:** _____ **Date:** _____

NCR:		WORK ORDER NON-CONFORMANCE (NCR)						
DATE	STEP	Description of NC Section A	Corrective Action Section B			Verification Section C	Approval Chief Eng	Approval QC Inspector
			Initial Chief Eng	Action Description Chief Eng	Sign & Date			

NOTE: Date & initial all entries

H:\fFORMS\Quality Assurance\approved QA\NCRWO RevE

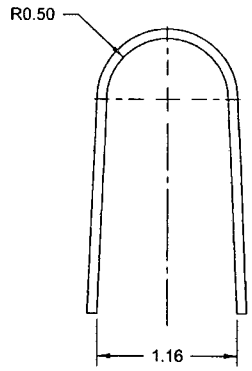

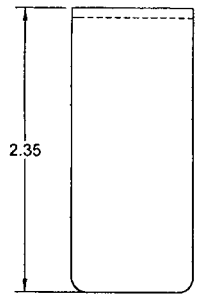

D3572-5 BRACKET
(MAKE FROM D3572-5F)

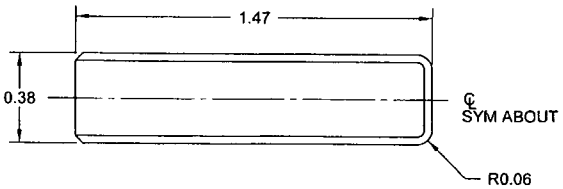

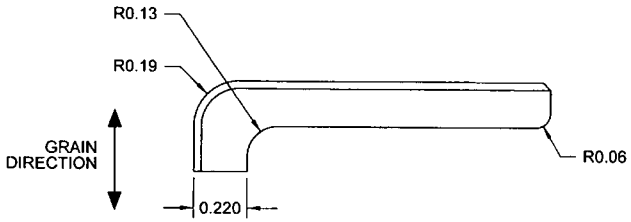

D3572-3 GUIDE

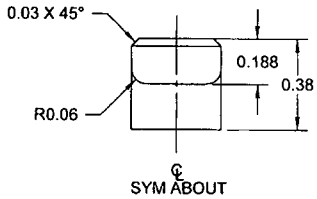

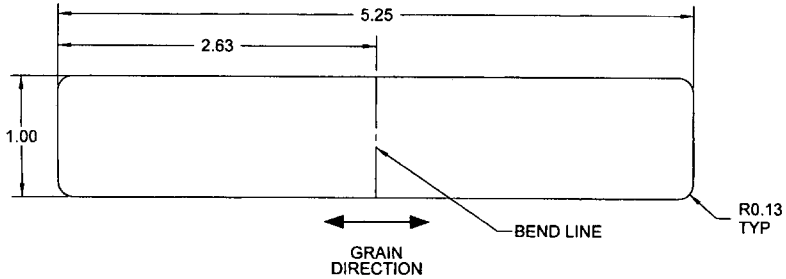

D3572-5F FLAT PATTERN

RELEASED 9/04/18

D3572-3 NOTES:
1) MATERIAL: 6061-T6 (OR T651/T6510/T651/T62) ALUMINUM BAR
PER AMS-QQ-A-225/8 (OR AMS 4117/4128/4115/4116) OR
AMS-QQ-A-200/8 (OR AMS4160)
REF DART SPEC M6061T6B
2) FINISH: N/A
3) TOLERANCES: PER DART QSI 018 UNLESS OTHERWISE NOTED
4) UNITS: INCHES UNLESS OTHERWISE NOTED
5) BREAK SHARP EDGES: 0.005 TO 0.010 MAX
6) IDENTIFICATION: N/A
7) WEIGHT: 0.01 lbs

D3572-5 NOTES:
1) MATERIAL: 6061-T6 (OR T62) ALUMINUM SHEET 0.080 THICK
PER AMS-QQ-A-250/11 OR AMS 4025 OR AMS 4027
REF DART SPEC M60601T6S.080
2) FINISH: N/A
3) TOLERANCES: PER DART QSI 018 UNLESS OTHERWISE NOTED
4) UNITS: INCHES UNLESS OTHERWISE NOTED
5) BREAK SHARP EDGES: 0.005 TO 0.010 MAX
6) IDENTIFICATION: N/A
7) WEIGHT: 0.04 lbs

DESIGN	LE	DART AEROSPACE LTD HAWKESBURY, ONTARIO, CANADA
DRAWN	AS	DRAWING NO. D3572 — REV. D — SHEET 4 OF 4
CHECKED		
MFG. APPR.		TITLE: GUIDE ASSEMBLY — SCALE: NTS
APPROVED		
DE APPR.		
DATE	09.04.17	

Dart Aerospace Ltd

W/O:		WORK ORDER CHANGES					
DATE	STEP	PROCEDURE CHANGE	By	Date	Qty	Approval Chief Eng / Prod Mgr	Approval QC Inspector

Part No: _____ **PAR #:** _____ **Fault Category:** _____ **NCR:** Yes No **DQA:** _____ **Date:** _____

Resolution: _____ **Disposition:** _____ **QA: N/C Closed:** _____ **Date:** _____

NCR:		WORK ORDER NON-CONFORMANCE (NCR)						
DATE	STEP	Description of NC Section A	Corrective Action Section B			Verification Section C	Approval Chief Eng	Approval QC Inspector
			Initial Chief Eng	Action Description Chief Eng	Sign & Date			

NOTE: Date & initial all entries

H:\fFORMS\Quality Assurance\approved QA\NCRWO RevE